January 16, 2019

Jim Oliver
Sampson Creek CDD
475 West Town Place, Suite 114
St. Augustine, FL 32092

Re: December 18, 2018 - Roadway Maintenance Report
MDG Project No.: 16080.02

Dear Jim:

Matthews Design Group (MDG) was recently tasked to assist the Sampson Creek Community Development District (CDD) in their roadway maintenance program by performing a field investigation which would be utilized for providing maintenance recommendations for the associated roadways.

In support of this task, this Roadway Maintenance Report summarizes the items observed during the December 18th, 2018 field investigation and provides recommendations for the CDD to consider.

This report is anticipated to serve as a discussion item, allowing the CDD to provide direction in regards to the final roadway maintenance deliverables.

We appreciate your selection of our firm to provide these important services. We look forward to discussing the field investigation findings and preparing a roadway maintenance program which meets the specific needs of the community.

Sincerely,
Matthews Design Group

Alex Acree, PE
Senior Project Manager

Roadways Inspected:

Roadway Name	Roadway Maintenance Report Sheet Number	Construction Plan Sheet Number	Roadway Length (lf)	Roadway Length (mi)
Brookhaven Drive	**5**	4	700	0.133
Chelsey Circle	**6**	5	295	0.056
Crested Heron Court	**6**	6	787	0.149
Cross Pointe Way	**6**	7-8	1,868	0.354
Drury Court	**7**	9-10	1,546	0.293
Eagle Point Drive	**8-13**	11-19	11,280	2.136
Forest Glen Way	**14**	20-21	1,794	0.34
Fox Tail Court	**14**	22	479	0.091
Glenfield Crossing Court	**14**	23-24	2,867	0.543
Hampton Crossing Way	**15**	25	978	0.185
Highland View Drive	**15**	26-27	1,658	0.314
Meadow View Lane	**16-18**	28-29	1,499	0.284
Pepper Stone Court	**19**	30	1,042	0.197
Red Hawk Court	**19**	31	442	0.084
Remington Court	**19**	32	651	0.123
St. Johns Golf Drive	**20-24**	33-38	7,263	1.376
Stonebridge Path Court	**25**	39	151	0.029
Stonehedge Court	**25**	40	241	0.046
Stonehedge Trail Lane	**25**	41-42	2,747	0.520

Total Roadway Length = 32,288 feet = 7.25 miles

General Findings:

Throughout the field investigation performed on December 18, 2018, there were items observed which were not isolated to a particular area. These items are discussed below, so that the CDD may develop an approach on how they would like to address them.

Street Trees:

Sampson Creek's street trees are a noteworthy edition to the aesthetic nature of this community and it is understood that there is a strong desire to leave as many trees alone as possible. It is this consideration which has led us to categorize the street trees, so that an approach may be developed which addresses the roadway maintenance concerns as well as the concerns of the community.

The Street Tree Categories established for discussion are as follows:

1. Tree was observed to be affecting Curb & Gutter Flowline / Roadway Drainage.
2. Tree was observed to be affecting Roadway Pavement.
3. Tree was observed to be significantly affecting a section of roadway, requiring site specific consideration.

Street Tree Category 1 – Trees affecting Curb & Gutter Flowline / Roadway Drainage:

There were many trees observed to be affecting the curb and gutter flowline and consequently the roadway drainage with their roots heaving the curb and gutter upward. This creates a break in the flowline and disrupts stormwater's path to curb inlets. Stormwater can now be trapped in a newly created depressional area, resulting in stormwater to remain on the roadway for a prolonged duration. Continued standing of water can lead to stormwater seeping into a roadway pavement's base course, reducing the pavement's ability to resist vehicular traffic loads. This ultimately leads to an accelerated deterioration of the pavement and an increase in maintenance costs in the future.

Street Tree Category 1 – Trees affecting Roadway Pavement:

There were many trees observed to be affecting roadway pavement with their roots heaving pavement upwards. This heaving creates an uneven driving surface and also introduces cracks within the pavement. The effect of the uneven driving surface on vehicular traffic is apparent, as it affects driving smoothness. The cracks in the pavement introduced by the roots provide a direct route for stormwater to seep into a roadway pavement's base course, further reducing the pavement's ability to resist vehicular traffic loads. Additionally, the deterioration of the pavement can be anticipated to accelerate resulting in an increase in maintenance costs in the future.

Street Tree Category 3 – Trees significantly affecting a section of Roadway:

There were a few situations where street trees not only affected a specific location, but where entire roadway sections were observed to be affected. These locations have been described in further detail within this report, so that a site-specific approach may be taken to address each situation.

The following considerations are recommended for discussion:

1. Are drainage issues being experienced in the vicinity of the area?
    a. Significant ponding during prolonged rain events.
    b. Prolonged standing water, which affect vehicular traffic or nearby homeowners.
2. Are pavement issues being experienced in the vicinity of the area?
    a. Frequent Pot Holes
    b. Cracking
3. Driveways and Sidewalk
    a. Are homeowners' driveways or nearby sidewalks being affected?

"Lip" of Pavement to Curb & Gutter Transition:

When pavement transitions to curb and gutter, it is typical to specify that the asphalt be approximately ¼" above the lip of the gutter. This is in order ensure that stormwater leaves the pavement surface and enters the stormwater conveyance system. Below is a graphical representation of the subject for reference.

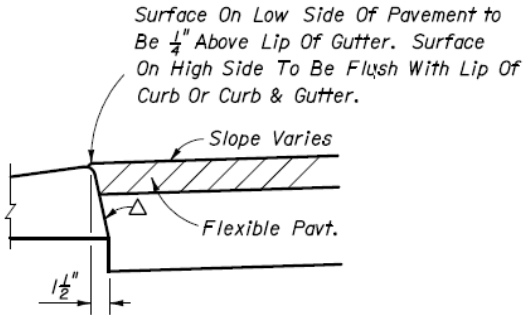

It was observed that the asphalt pavement was below the lip of the gutter for a significant portion of the subdivision's roadways. The concern, in such a case, is that stormwater has the ability to seep between the pavement and curb face, into roadway pavement's base course. As the stormwater within the base course now equalizes with groundwater, it can weaken the base course and further accelerate pavement deterioration.

Consideration of this should be taken when developing the roadway maintenance program. Depending on how much lower the asphalt edge is relative to the curb and gutter lip, it might be recommended to apply more asphalt than milled away. Alternatively, it might be better to reduce the amount milled if the existing asphalt thickness is found to be thin.

Thin Asphalt Section within Pavement:

Throughout the subdivision, it was observed in some locations that the thickness of asphalt could be quite thin. The milling and resurfacing design for such operations should take the existing section into account, as it is important that a good "bond" be created between the existing surface and new asphalt.

For this reason, some areas of particular concern are recommended to have additional testing prior to maintenance in order to ensure that the proposed maintenance operations are effective and long lasting. The additional testing is recommended to be pavement cores, where the existing base and asphalt thickness can be measured and considered.

1. **Brookhaven Drive:**
   a. **Street Tree Category 1,2,3:**
      i. 
      ii. 
         1. The eastern curb line of Brookhaven Drive has apparent ponding and drainage issues, due to tree roots affecting the curb and pavement.
         2. Stormwater is unable to flow southward to the inlet, providing for prolonged standing water.
         3. Estimated to affect approximately 150 to 200 LF of the east side of the roadway.
   b. **Curb line cleanup; vegetation removal; potential curb installation:**
      i. 
         1. The terminal cul-de-sac has a build up of sediment and vegetation along the eastern and northern sides. It is possible that curb wasn't installed at this location due to potential future extension.

2. **Chelsey Circle:**
   a. **"Lip" of Pavement to Curb & Gutter Transition:**
      1. Recommend additional consideration be made to provide "lip" along entire 295' of roadway.
   b. **Cul-de-Sac Grading & Pavement Concern:**
      i. 

         1. Pavement Damage at curb line due to poor drainage and curb design.
         2. Recommend special patch to repair this location in front of 1316 Chelsey Circle.

3. **Crested Heron Court:**
   a. **"Lip" of Pavement to Curb & Gutter Transition:**
      1. Recommend additional consideration be made to provide "lip" along entire 787' of roadway.
   b. **There were no other apparent maintenance concerns with this roadway observed.**

4. **Cross Pointe Way:**
      1. There were no apparent maintenance concerns with this roadway observed.
      2. It is recommended that the mill and resurface design of this roadway match with that of the intersecting street of Stonehedge Trail Lane.

5. **Drury Court:**
   a. **Street Tree Category 2:**
      i. 
         1. Two (2x) trees were found to have substantial impacts to the roadway pavement along Drury Court.
            a. STA 16+25 RT; 1521 Drury Ct.
            b. STA 17+75 LT; 1532 Drury Ct
         2. These two trees were not observed to be significantly affecting the roadway gutter.

6. **Eagle Point Drive:**
   a. **"Lip" of Pavement to Curb & Gutter Transition:**
      1. Recommend additional consideration be made to provide "lip" along the majority of the 11,280' of roadway.
   b. **Typical Pavement Condition:**

i. 

ii. 

      1. Noticeable cracking was observed @ STA 78+00 to 83+50

iii. 

1. Poor drainage conditions and grading @ STA 47+00; 1035 Eagle Point Drive.
2. Site Specific Asphalt/Gutter Repair Recommended

c. <u>Remove Vegetation around Stop Sign @ Meadow View Lane Intersection:</u>

1. Vegetation was observed to be growing around the Eagle Point Drive Stop sign at the referenced intersection. Recommend removal due to safety and liability concerns.

d. <u>Curb and Gutter Repair:</u>

i. 

1. Chipped curb and gutter was observed in multiple locations.
2. Recommend replacement @ STA 101+40, STA 103+00 totaling an approximate 15 feet.

e. <u>Manhole Considerations:</u>

i. 

1. STA 83+75

f. <u>Street Tree Category 1,2,3:</u>

i. 

ii. 

iii. 

1. Eagle Point Drive has approximately 1,500' of roadway particularly affected by street trees (STA 103+00 to STA 118+00). A site-specific approach will need to be taken to address the particular concerns of the CDD in this location.
2. The severity of each tree's impact varies, but significant impacts to the curb and gutter flow lines were observed as well as significant impacts to the roadway pavement.
    a. Significant standing water was observed in multiple locations, on both sides of the roadway.

g. <u>Leo Maguire Parkway Entrance:</u>

i. 

ii. 

iii. 

1. Approximately 300' approaching the intersection, the pavement was observed to have significant cracking with low spots, thin pavement, chipping and holes.
2. Locations where chipping and holes have occurred, it was observed that the asphalt thickness is relatively thin.
3. Asphalt patches were observed, with failure apparently following the repairs.

As the longest roadway of the subdivision, Eagle Point Drive serves as a primary collector road for the residents and is exposed to increased traffic. Significant wear was noted through the travel lanes along many portions of the roadway. Considering the pavement concerns noted above, <u>it is recommended to have pavement cores taken strategically in order to provide the best milling and resurfacing design.</u>

7. **Forest Glen Way:**
   a. **"Lip" of Pavement to Curb & Gutter Transition:**
      1. Recommend additional consideration be made to provide "lip" along the 1,794' of roadway.
   b. **Thin Asphalt:**
      i. 
         1. Cracking and Chipping was observed within the terminal cul-de-sac.

8. **Fox Tail Court**
   a. **"Lip" of Pavement to Curb & Gutter Transition:**
      1. Recommend additional consideration be made to provide "lip" along entire 479' of roadway.

9. **Glenfield Crossing Court**
   a. **"Lip" of Pavement to Curb & Gutter Transition:**
      1. Recommend additional consideration be made to provide "lip" along the first approximate 2,300' of roadway. (STA 10+00 to STA 33+00)
      2. Note: Paving appears to have occurred in two instances, with (STA 33+00 to STA 38+67) not having as much of an issue with "lip"

10. <u>Hampton Crossing Way:</u>

1. It is recommended that the mill and resurface design of this roadway match with that of the intersecting street of Eagle Point Drive.

a. <u>Curb & Gutter:</u>

ii. 

1. Damaged Curb was observed in two locations, totaling an approximate 15 feet.

11. <u>Highland View Drive:</u>

a. <u>"Lip" of Pavement to Curb & Gutter Transition:</u>

1. Recommend additional consideration be made to provide "lip" along first approximate 400' of roadway. (10+00 to 14+00).
2. Note: Paving appears to have occurred in two instances, with (STA 14+00 to STA 17+00) not having as much of an issue with "lip".

12. <u>Meadow View Lane</u>

a. <u>Street Tree Category 2:</u>

i. 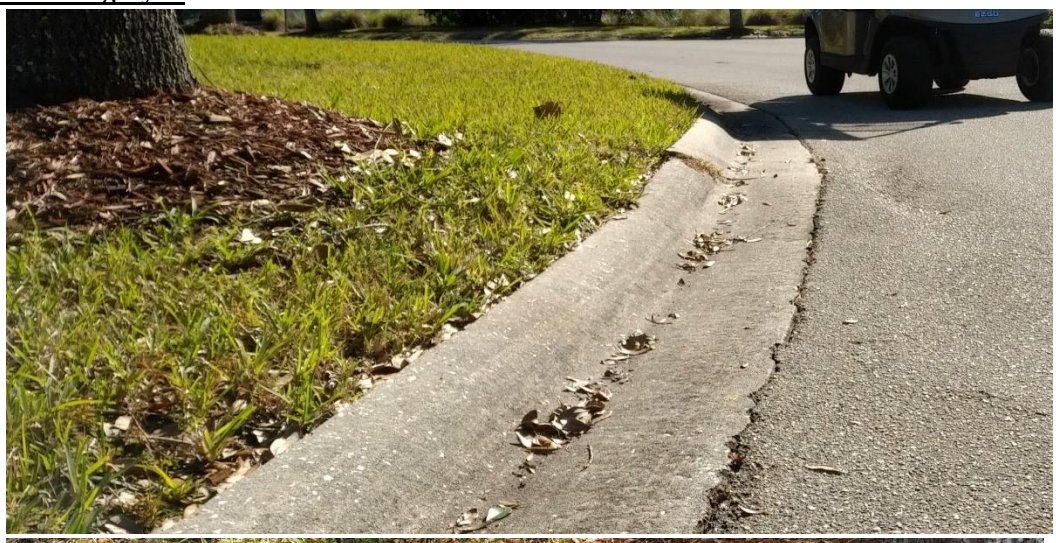

ii. 

1. This roadway was observed to have two (2x) trees which were observed to be significantly affecting the roadway pavement.
    a. STA 14+00 LT, 15+00 RT,

b. <u>Street Tree Category 1,2,3:</u>

i. 

ii. 

iii. 

1. A low spot observed within the terminal cul-de-sac is suspected to be a result of three consecutive street trees affecting the curb and gutter flow line. This results in depressional areas which allow for prolonged standing water.
2. The area affected is approximately 200' from (STA 23+00 LT to STA 24+99 LT)

c. <u>Curb & Gutter:</u>

i. 

1. Curb and Gutter was observed to need replacement at 1053 Meadow View Lane. Estimated 5'-10'. (STA 19+500 LT)

13. <u>Pepper Stone Court:</u>

1. There were no apparent maintenance concerns with this roadway observed.
2. It is recommended that the mill and resurface design of this roadway match with that of the intersecting street of Eagle Point Drive.

14. <u>Red Hawk Court:</u>

1. There were no apparent maintenance concerns with this roadway observed.
2. It is recommended that the mill and resurface design of this roadway match with that of the intersecting street of Eagle Point Drive.

15. <u>Remington Court:</u>

1. There were no apparent maintenance concerns with this roadway observed.
2. It is recommended that the mill and resurface design of this roadway match with that of the intersecting street of St. Johns Golf Drive.

16. St. Johns Golf Drive:

a. Leo Maguire Parkway Entrance:

i. 

ii. 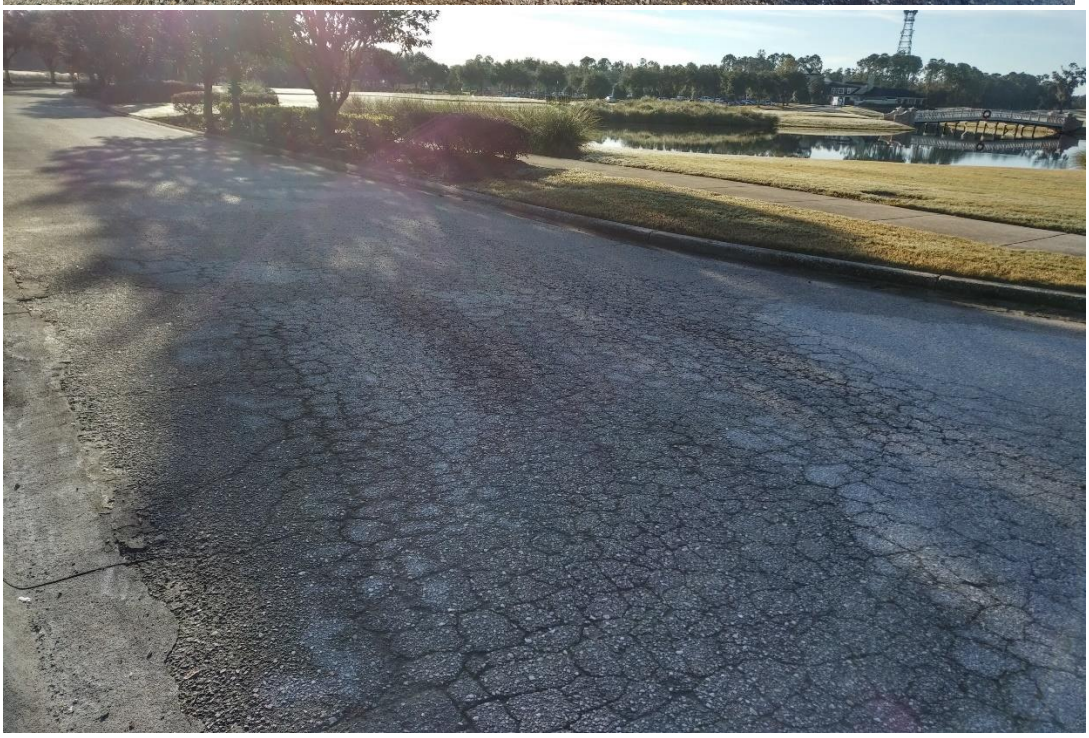

1. Pavement was observed to have significant cracking with low spots, thin pavement, chipping and holes. (Approximately 500')
2. In locations where chipping and holes have occurred, it was observed that the asphalt thickness is relatively thin.

b. <u>Sanitary Manholes:</u>

i. 

1. Multiple Sanitary Manholes were observed to have settlement.
    a. Possible causes for differential settlement:
        i. Insufficient compaction.
        ii. Leaking sanitary laterals or sanitary mains.

c. Street Tree Category 1,2:

i. 

ii. 

iii. 

1. A total of five (5) trees were observed to be significantly affecting the roadway pavement.

d. <u>Longitudinal Differential Settlement:</u>

i. 

1. Depressions within the travel lanes was observed to occur over approximately 400' at stations 34+00 to 38+00.
2. Recommend cores to determine best mill and resurface design.
3. Suspect the issues are due to either poor compaction of base prior to asphalt laying or high groundwater affecting the base.

e. <u>Thin Asphalt Section within Pavement:</u>

i. 

1. Multiple pavement patches were observed along St. Johns Golf Drive. These locations will require special attention when milling and resurfacing, as they will more than likely not mill evenly.

As the second longest roadway of the subdivision, St. Johns Golf Drive serves as a primary collector road for the residents and is exposed to increased traffic. Significant wear was noted through the travel lanes along many portions of the roadway. Considering the pavement concerns noted above, <u>it is recommended to have pavement cores taken strategically in order to provide the best milling and resurfacing design.</u>

17. <u>Stonebridge Path Court</u>

1. There were no apparent maintenance concerns with this roadway observed.
2. It is recommended that the mill and resurface design of this roadway match with that of the intersecting street of St. Johns Golf Drive.

18. <u>Stonehedge Court</u>

1. There were no apparent maintenance concerns with this roadway observed.
2. It is recommended that the mill and resurface design of this roadway match with that of the intersecting street of Stonehedge Trail Lane.

19. <u>Stonehedge Trail Lane:</u>

a. <u>Pavement Condition:</u>

1. Minor cracking within depressional areas were observed at the Leo Maguire Parkway entrance. These are noted, but do not warrant extensive consideration for mill and resurface maintenance project.
2. Settlement and Depressions were noted around Drainage Structures. Suspect High Groundwater. Recommend cleaning out underdrains with Roadway Maintenance.
    a. STA 19+50 (1160 Stonehedge Trail Ln)
    b. STA 31+15 (1231 Stonehedge Trail Ln)
    c. STA 22+25 to STA 23+25 (1173 Stonehedge Trail Ln)

b. <u>Sanitary Manhole:</u>

i. 

1. Differential settlement was noted around a manhole at the intersection with Cross Pointe Way.
2. Recommend additional investigation into potential utility breaks.
3. A water meter box was observed to be completely submerged, at the ROW line immediately north of the manhole/intersection.